LEICA **CALONOX 2 VIEW** & **CALONOX 2 VIEW LRF**

Technical Data.

Bezeichnung	**Leica Calonox 2 View**	**Leica Calonox 2 View LRF**
Device type	Thermal imaging device	Thermal imaging device
Type No.	1966	1986
Order No.	50 513	50 512
Scope of delivery	Calonox 2 View, cordura case, charging cable, Tenebraex flip cap, carry strap, quick start guide, lens cleaning cloth, certificate	Calonox 2 View LRF, cordura case, charging cable, Tenebraex flip cap, carry strap, quick start guide, lens cleaning cloth, certificate
Sensor type	VOx	
Sensor size	640 x 480 px	
Pixel size	12 µm	
Screen type	OLED	
Screen diagonal	0.49”, active area 0.35”	
Screen resolution	1920 x 1080 px	
Image repetition frequency	60 Hz	
Lens focal length	42 mm /1.1	
Thermal sensitivity NETD	< 40 mK	
Optical basic magnification	2,5 x	
Digital Zoom	1 x/2 x/3 x/4 x	
Field of view	10.3° x 7.7° 18 x 13,5 m/100 m	
Diopter adjustment	±4 dpt	
Range/Resolution calculated for image subject 1.7 m x 0.5 m (66.9 in x 20.0 in)		
Acquisition range/Resolution	2,210 m/2 px (2,417 yrd/2 px)	
Detection range/Resolution	770 m/6 px (842 yrd/6 px)	
Identification range/Resolution	390 m/12 px (427 yrd/12 px)	
Laser	—	Eye-safe invisible laser according to EN and FDA class 1
Wavelength	—	905 nm
Range	—	high-reflection targets: 1,200 m (1,312 yrd) low-reflection targets: 500 m (547 yrd)
Video output	Wi-Fi, USB-C	
Video recording	yes	
Video/Picture resolution	640 x 480 px	
Cable socket	USB-C	
Wireless connection	WiFi (2,4 GHz) + Bluetooth®	

Leica Camera AG I Am Leitz-Park 5 I 35578 WETZLAR I GERMANY I Phone +49(0)6441-2080-0 I Fax +49(0)6441-2080-333 I www.leica-camera.com

LEICA **CALONOX 2 VIEW** & **CALONOX 2 VIEW LRF**

Technical Data.

Bezeichnung	**Leica Calonox 2 View**	**Leica Calonox 2 View LRF**
Internal memory	32 GB	
Protection class	IP 67, nitrogen-filled	
Operating temperature	-20 °C to +50 °C (-4°F to 122°F)	
Operating temperature (charge battery)	+10 °C to +30 °C (50°F to 86°F)	
Battery life	approx. 8 — 11 h	approx. 6 h
Battery	2x 2,420 mA/h not removable	3,500 mA/h not removable
Charging options	USB-C, household plug, power bank, car	
Accessory thread	M43 x 0.75	
Tripod thread	A ¼ DIN 4503 (¼"), M4 standard thread	
Material	fiberglass-reinforced plastic with silicone armoring	
Dimensions (L x W x H)	139 x 90 x 61 mm (5.5 x 3.5 x 2.4 in)	139 x 110 x 61 mm (5.5 x 4.3 x 2.4 in)
Weight (with battery)	approx. 657 g (23.2 oz)	approx. 688 g (24.3 oz)
Shutter	shutterless	

Leica Camera AG I Am Leitz-Park 5 I 35578 WETZLAR I GERMANY I Phone +49(0)6441-2080-0 I Fax +49(0)6441-2080-333 I www.leica-camera.com

LEICA **CALONOX 2 VIEW LRF**

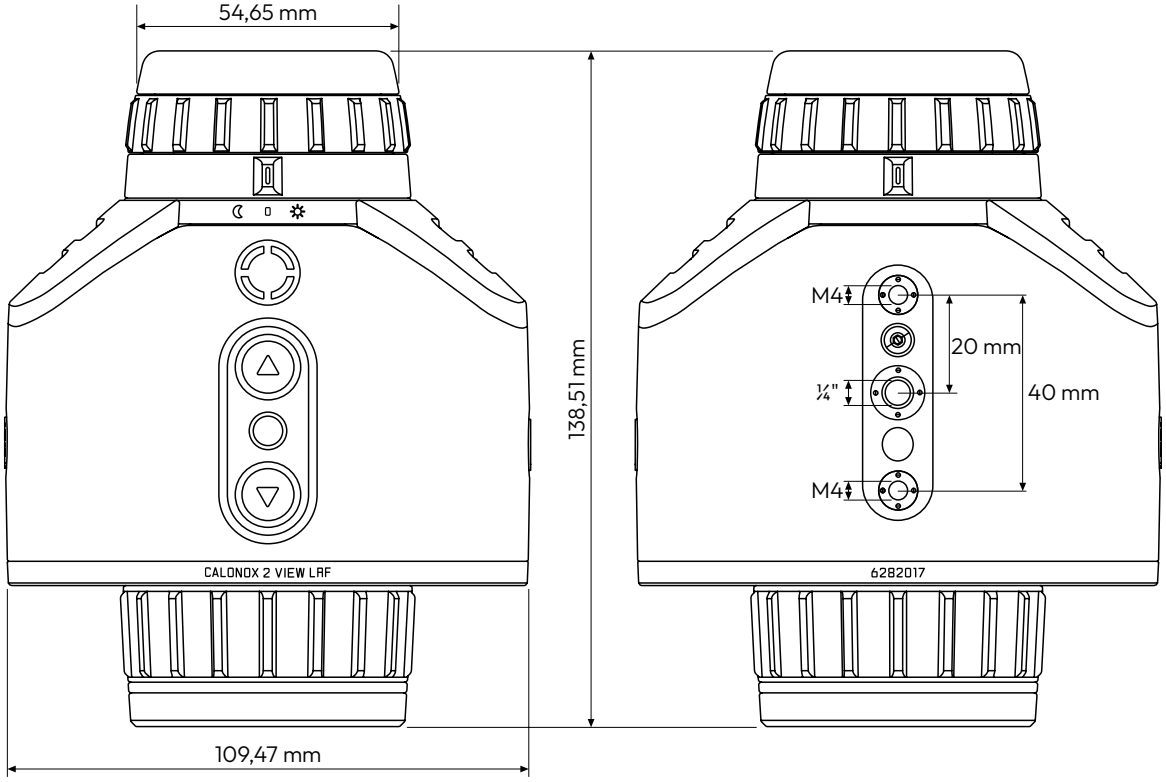

LEICA **CALONOX 2 VIEW**

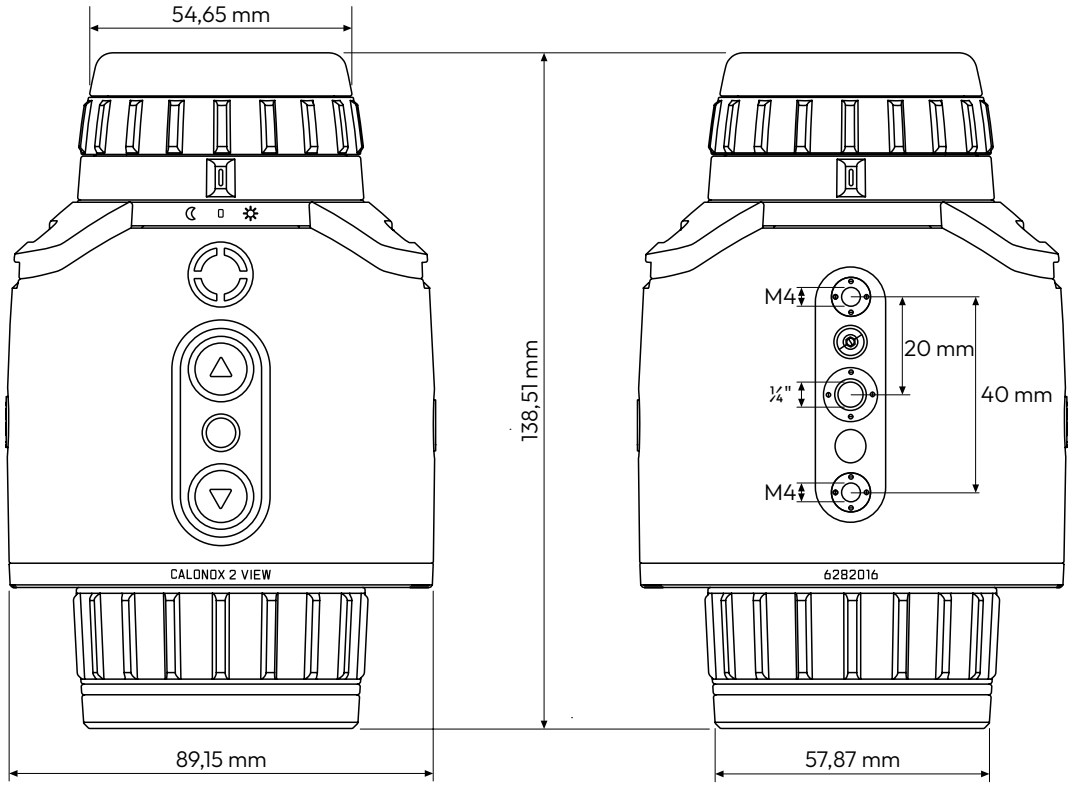

Leica Camera AG I Am Leitz-Park 5 I 35578 WETZLAR I GERMANY I Phone +49(0)6441-2080-0 I Fax +49(0)6441-2080-333 I www.leica-camera.com